Gigabit Single Port RJ45 Connector TJ3009

- Optimized for leading IC manufacturers per IEEE 802.3 Standard
- RSH 260°C for 10 seconds with reflow rating of 245°C
- Operating Temperature: 0°C - 70°C

ELECTRICAL SPECIFICATIONS @ 25 °C											
OCL	**Insertion Loss** (dB Max.)			**Return Loss** (dB Min.)			**CMRR** (dB Min.)	**Crosstalk** (dB Min.)			**Isolation**
100 kHz, 0.1 Vrms With 8 mA DC Bias	0.1 MHz	100 MHz	125 MHz	1-30 MHz	30-60 MHz	60-80 MHz	0.1-100 MHz	30 MHz	60 MHz	100 MHz	Vrms Min.
350 µH	-1.1	-1	-2	-16	-14	-10	-35	-40	-35	-30	1500

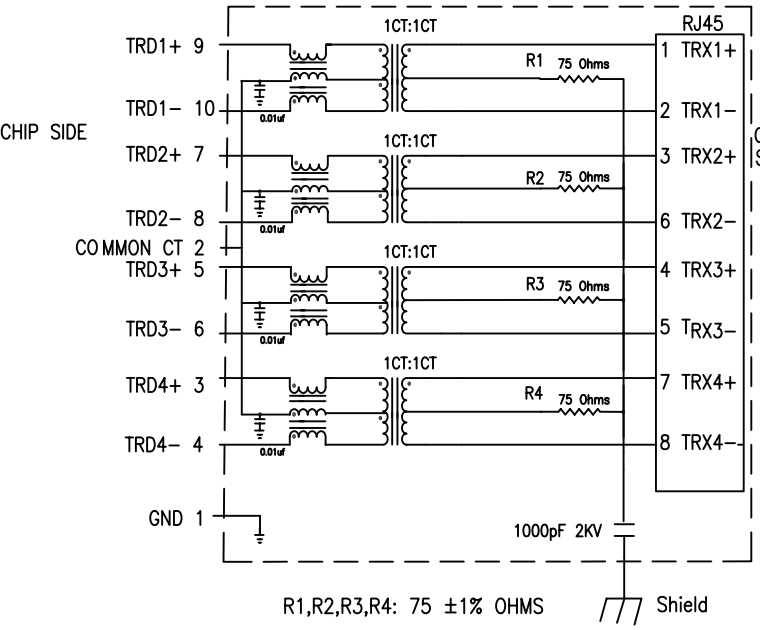

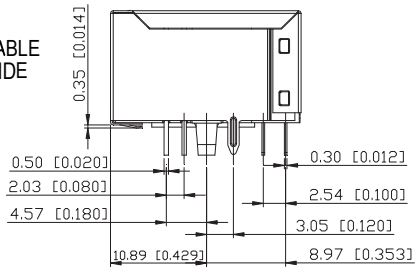

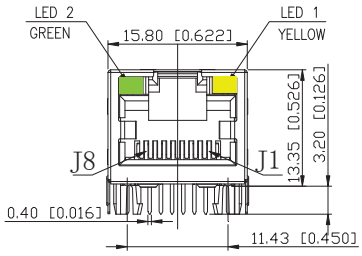

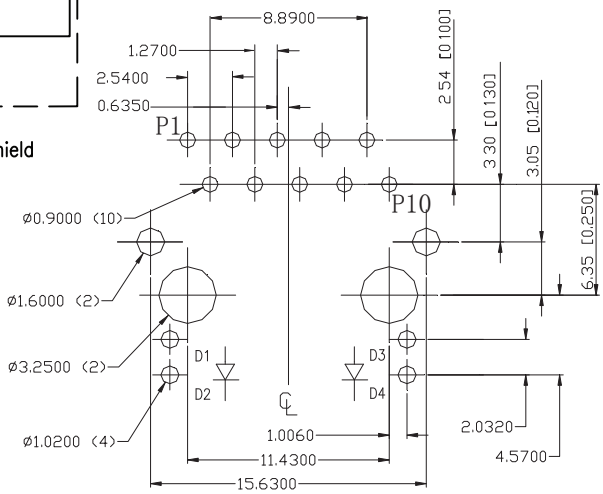

SUGGESTED PCB LAYOUT
(TOP VIEW)

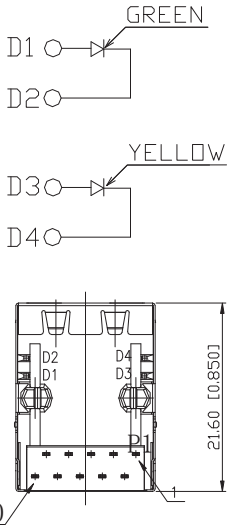

TESLA MAGNETICS INC.
3240 SCOTT BLVD
SANTA CLARA, CA 95054

Data subject to change without notice

TJ3009 Rev. 1

TEL: (408) 980-0407
FAX: (408) 980-1555
www.teslamagnetics.com